25467 ETA-4/5 ADJUSTABLE BLOCK HANGER

REF.	STOCK CODE	DESCRIPTION	QUANTITY
1	78287	Safety Cable for ETA Hangers	1
2	52270	5/8-11 Hex Jam Nut	2
3	53405	5/8 F436 (A325 Struc F/W)	2
4	78288	Threaded Rod Hanger Block	1
5	52315	5/8-11 Anco 2H Coloc Nut	2
6	50035	3/8-16 x 4 1/2" Rod End	2
7	59955	ETA-4 475A Mach. Block	1
8	53340	5/8 Spherical Chair Washer	1
9	51012	5/8-11 x 2 3/4" A325 Bolt	2
10	52095	3/8-16 Top Lock Nut	2
11	51140	5/8-11 x 6" HHB 1 1/2" Shank	1

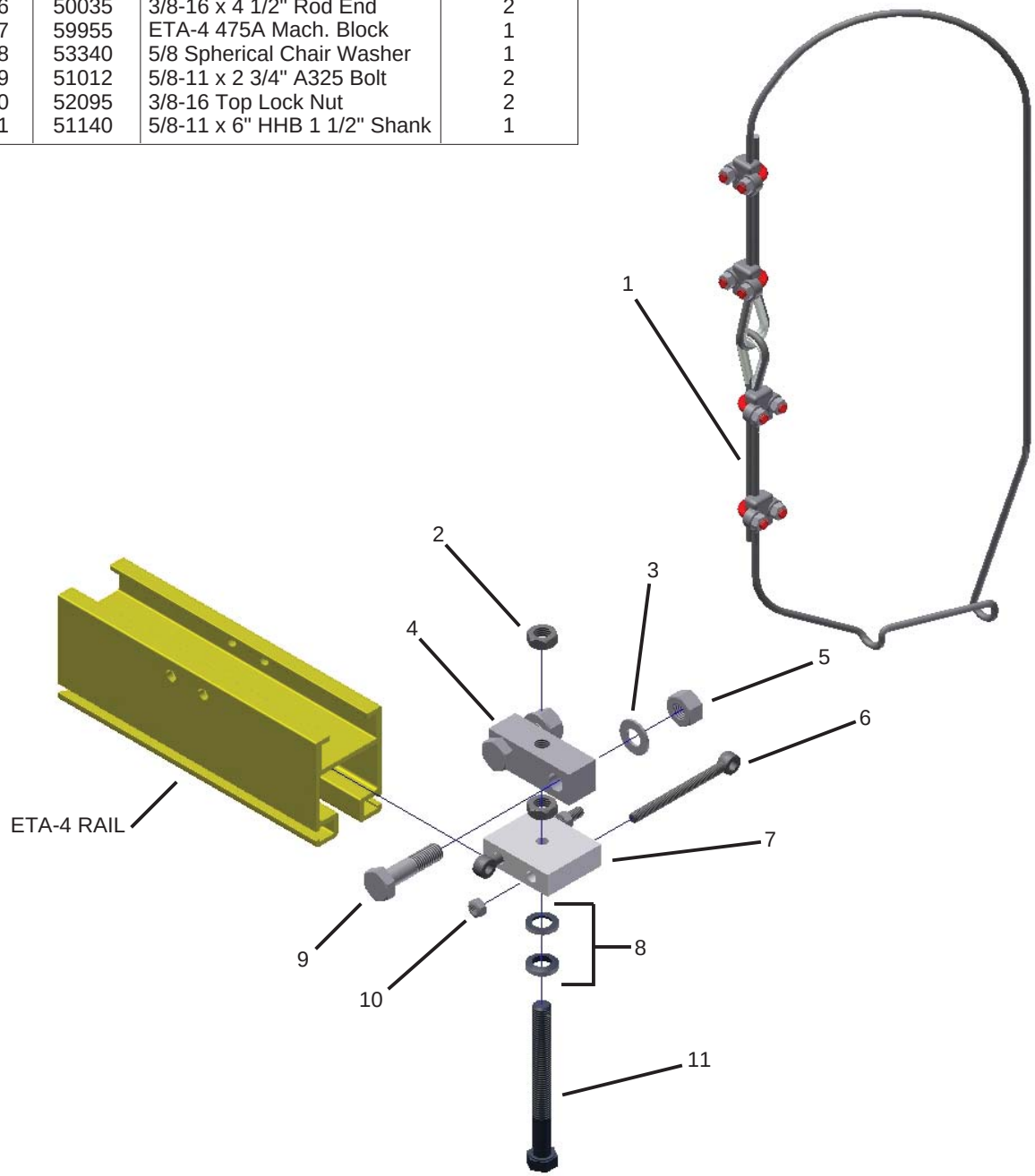

© Copyright 2014, Unified Industries, Inc. All Rights Reserved. www.unified-ind.com