SPARK RESISTANT

-BRONZE HOOK
-STAINLESS STEEL CHAIN

PC# 4 | NO. REQ. 1

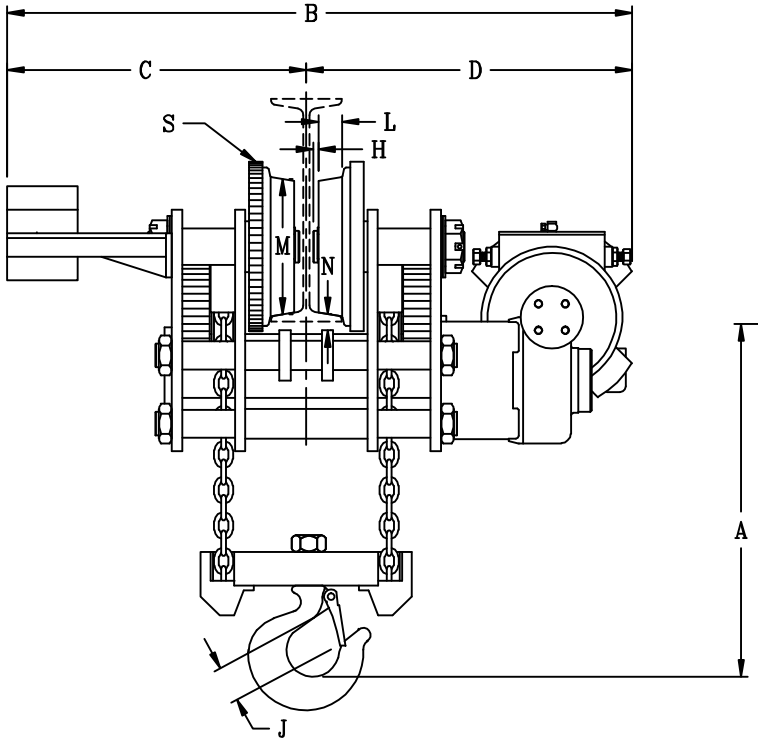

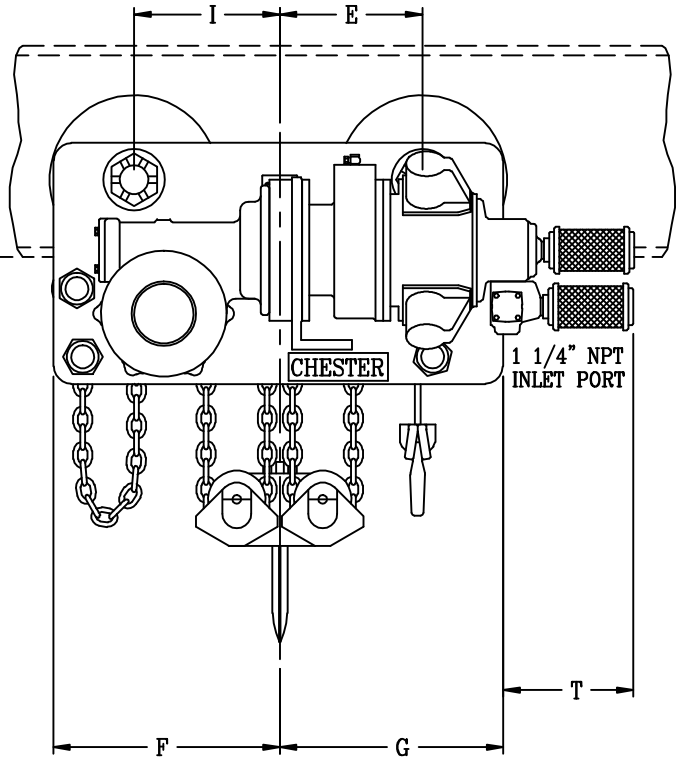

	A	22 1/8"
	B	53 1/4"
	C	25 1/2"
	D	27 3/4"
	E	12 1/8"
	F	19 1/4"
	G	19"
^	H	7/16"
	I	12 3/8"
	J	4"
	L	2"
	M	11 3/4"
#*	N	1 3/16"
	R	xx
	S	14 13/32"
	T	11 3/16"

* TO WHEEL RUNNING SURFACE OF BEAM
\# TO UNDER BEAM ROLLER - (CLOSEST POINT OF CONTACT)
^ FROM THE FACE OF THE WHEEL TO END OF THE AXLE
CUSTOMER MUST TAKE INTO CONSIDERATION FLANGE WIDTH AND THICKNESS OF BEAM
DIMENSIONS SHOWN ARE CORRECT FOR ANY "S" OR "W" BEAM, PLAIN, HAND GEARED OR MOTORIZED TROLLEY.
FLAT TREAD WHEELS, NOT SHOWN, ARE SUPPLIED FOR "W" BEAM APPLICATIONS
NOTE: THIS UNIT OPERATES ONLY ON THE BEAM SPECIFIED

MK.	REVISIONS	CK-DATE

24 TON AIR LOW HEADROOM HOIST

CHESTER HOIST
LISBON, OHIO

DR. MAM	TR.	CK.	AP.
SCALE NONE		DATE 9/25/08	
REF. DWG. NO.			
Dwg. No. C-49225			